REFERENCE GUIDE

POWER FACTOR REGULATOR

LSB-T

LSB-T *3phase*

VMtec GmbH
Wiesbaden, 65189,
Park str 23, Germany
Tel.:+49/(0)611/9005701
Fax:+49/(0)611/9005702

e-mail: info@vmtec.de
http://www.vmtec.de

MANAGEMENT SYSTEM
certified by DQS according to
DIN EN ISO 9001
Reg. No. 004676

Revisionlist

Datum	Name	Revision	Kommentar
02.09.08	Le	01	initial document release (SW 2.5.1)
19.09.08	MR	02	Editorial changings
21.07.10	MR	03	SW 2.7.0 incl. datalogger
02.08.10	MR	04	AI for LSB-T3phase
13.09.10	MR	05	Editorial corrections
20.09.10	Le	06	Add menu items to “Quickstart SETUP”

Important Notice:

LSB-T with option –DM includes a rechargeable battery to run the real-time clock. To replace this battery, please send the relay to VMtec. We will forward this battery to a recycling system.

Important information!

If the sign aside appears besides a text passage in the manual the reader is strongly advised to read the corresponding information as it is very important for the device usage! It can contain safety advice or other information for the correct handling of the device. If the information is disregarded, the device may be inoperable or even damaged!

Contents

Contents 4

1 Installation and Connection 6

1.1 Auxiliary voltage 6

1.2 Current measurement 6

1.3 Voltage measuring 7

1.4 Control outputs 7

1.5 Alarm relay 8

1.6 Digital input 8

1.7 Digital output 8

1.8 User Interface 9

2 MENU LSB-T 10

2.1 MEAS. VALUES 10

2.2 HARMONICS 11

2.3 STEPINFO 11

2.4 Quickstart SETUP 12

2.5 SETUP 15

2.6 MANUAL 28

2.7 DATALOGGER (option –DM) 29

2.8 DEVICE INFO 29

3 Wiring diagrams LSB-T 30

3.1 LSB-T06/12R 30

3.2 LSB-T06/12T 31

3.3 LSB-T12RT 32

3.4 LSB-T06/12R-3A (LSB-T*3phase*) 33

3.5 LSB-T06/12T-3A (LSB-T*3phase*) 34

3.6 LSB-T12RT-3A (LSB-T*3phase*) 35

3.7 LSB-T06/12R-HV 36

3.8 LSB-T06/12R-3AHV (LSB-T*3phase*) 36

3.9 LSB-T I/O 37

3.10 Synchronizing of datalogger 37

4 Standard Setting 38

5 Trouble shooting 40

6 Technical Data 41

1 Installation and Connection

Only qualified staff is allowed to perform the installation. All legal rules have to be observed and technical standards have to be met. Before connecting the device check that all connecting leads are de-energized and that current transformers are bypassed.

1) Compare auxiliary-, measurement-, control voltage, frequency and the current path of the device (see type label) with the data of the electricity network.
2) Assemble the relay in the switch panel with the 2 mounting clips. If the device is not fitting in the cutout the small plastic bars on the side of the case can be removed with a knife.
3) Connect protective ground to the terminal link of the case.
4) Connect in accordance to the wiring diagram (see chapter "connection"). Pay special attention to the cross section size of the CT connections! An integrated voltage observation with regard to the auxiliary voltage in LSB-T guarantees a safety disconnection of the capacitors in case of undervoltage. It must be ensured, that auxiliary voltage is taken from the identical phase as control voltage for the contactors, to guarantee that all switching elements are safely switched off in case of under voltage.
5) Remove short circuit links of the current transformer before commissioning!

1.1 Auxiliary voltage

At LSB-T auxiliary voltage has to be connected separately from measuring voltage. The terminals for auxil-iary voltage are marked with La, Lb and 0.

Terminal 0 has to be connected always. La and Lb are different tapping points of the transformer to allow the usage with different voltage levels. The detailed connection depends on the device type and can be seen on the sticker at the rear side of the regulator.

1.2 Current measurement

LSB-T can be used in combination with x/5Amp current transformer as well as with x/1Amp types. The terminals for CT connection are marked with K (S1) and L (S2). CT has to be mounted in the way, that K (P1) connected to the feeder from utility and L (P2) is connected to load.

Current measuring is necessary for calculation of control deviation and capacitors sizes for reactive power regulation as well as for showing and monitoring different measuring values.
LSB-T can be used with summation transformer as well. To get proper function, please pay attention to correct polarity of all CTs and to the correct setting of CT-factor. The CT-factor for a summation transformer can easily be calculated by adding the single transformer ratios (e. g. 1000A/5A + 1000A/5A + 1000A/5A = 200 + 200 + 200 = CT-factor 600).

At LSB-T3phase (option -3A) please take care that the current inputs are connected to the correct phases in clockwise rotary field.

1.3 Voltage measuring

Terminals Um1 and Um2 are used for voltage measuring. Effective range is 50V to 530V AC and 45Hz to 65Hz. Voltage measuring is necessary for calculation of control deviation and capacitors sizes for reactive power regulation as well as for monitoring and protecting capacitors against over- and undervoltage and THD U and for showing different measuring values.
If voltage is out of tolerance (range can be set), all active steps are disconnected and the regulation stops.

Voltage has to be measured as standard either from L1-N or L2-L3. If measuring voltage is taken from L1-N or from L2-L3, is detected automatically by comparing the value of measuring voltage with the setting of nominal voltage.

It's also possible to measure voltage from other phases as above. In this case either automatic initialization must run (2.4.5) or the correct setting for phase-compensation (2.5.3.6) has to be done. Details of the functions can be found in the referring chapters.

1.4 Control outputs

LSB-T is available with up to 12 outputs. Depending on the regulator type the outputs can be relay outputs, transistor outputs or a mix between both types. The indication of the type can be found on the rear sticker either with the type description or the symbols of the output clamps.

If you have got the regulator type with mixed output steps, please pay attention that the clamp A1 is the common root for the relay outputs 1 - 6 and clamp A2 is the common root for the transistor outputs 7 - 12!

1.4.1 Relay outputs

The relay outputs of the power factor controller are designed for the direct connection to contactors. The relay outputs are potential-free with one common root.

Maximum breaking capacity for ohmic load: 250V AC / 5A, 400V AC / 2A, 110V DC / 0,4A, 30V DC / 5A.
Maximum fuse rating: 6A.

1.4.2 Transistor outputs

The transistor outputs of the power factor controller are designed for the direct connection to thyristor switches. These open-collector outputs have got one common root. To trigger a thyristor switch connect (–) to the root and (+) directly to the thyristor switch.

Maximum breaking capacity: 8-48V DC / 100mA

1.5 Alarm relay

LSB-T is equipped with an alarm relay to signal proper function of the system. The alarm relay has one C/O contact. The common point is terminal M.

Between the terminals M and MO is the breaking contact. This contact is closed in alarm condition or when LSB-T is disconnected from voltage.

Between the terminals M and MS is the closing contact. This is closed in proper condition of the system.

The breaking capacity is 3A / 250V AC.

The circuit diagram is in chapter 3.9!

1.6 Digital input

1.6.1 Digital input for alarm-system

LSB-T is equipped with a digital input for AC-voltage for alarm-system (50-250V AC, terminals DI1.1 and DI1.2). Digital input can be active high or active low. The function can be programmed in the menu "SETUP / ALARM / DI INPUT" (2.5.7)

More details for the programming can be found in chapter "ALARM". **See circuit diagram in chapter 3.9!**

1.6.2 Digital input for data-logger synchronisation (only option –DM)

LSB-T with option –DM is equipped with a digital input for DC voltage (10-30VDC, terminals DI0.1 and DI0.2). More details can be found in chapter 2.5.9. **The circuit diagram is in chapter 3.10!**

1.7 Digital output

LSB-T is equipped with one digital output (terminals DO1 and DO2). This output is a potential-free closing contact. The breaking capacity is 5A / 250V AC. The function of this output can be programmed in the menu "SETUP / ALARM" (chapter 2.5.7). **The circuit diagram is in chapter 3.9!**

1.8 User Interface

User Interface of LSB-T is a graphical LCD and a membrane keyboard with 4 softkeys.

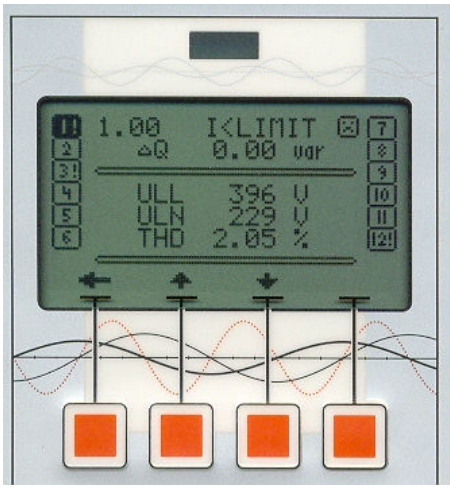

LCD is split into 4 areas:

Top area: the two lines of top area are showing information about general status of the relay. The readings of this area are always available, independent from the menu which is used. The readings of top area can be parametered in menu SETUP/DISPLAY.
The “sad face” indicates that there are problems with the level of voltage or current.
The “happy face” indicates that levels of voltage and current are ok.
The “serious face” indicates setting PFC OFF or PFC FREEZE.

Status columns: left and right column are showing the status of the control exits.

- [1] Step 1, status: off, type: NORMAL or FAST
- [2!] Step 2, status: off, type: NORMAL blocked or FIX OFF
- [F] Step 3, status: off, type: FAULTY
- [■] Step 4, status: on, type: NORMAL or FAST
- [■] Step 5, status: on, type: FIX ON
- [ ] Step 6, status: off, type: OFF, not available or PFC OFF

“NORMAL blocked” can be caused by discharging time (2.5.4.1)
“PFC OFF” can be caused by voltage out of tolerance (2.5.3.7 and 2.5.3.8), by relay is off due to setting (2.4.6) or due to Alarm system (2.5.7).

Main area: the three lines of main area are for menu navigation and display of information

Softkey area: the softkey area shows the function of the membrane-keyboard. Depending on the opened menue, the function is different.

2 MENU LSB-T

2.1 MEAS. VALUES

This submenu shows the available measurement values in the main area of LCD. The values can be chosen by pushing the ▲ / ▼-keys.

Available measuring values:

LSB-T	**LSB-T*3phase (option -3A)***
ULL (voltage phase – phase) **ULN** (voltage phase – neutral) **THD U** (THD voltage) **I** (current) **THD I** (THD current) **P** (total active power) **Q** (total reactive power) **S** (total apparent power) **F** (frequency) **ΔQ** (control deviation in kvar) **T** (temperature at rear side of the device) **PF** (power factor Λ = P/S, kW/kVA) **CP** (cosφ) **OPH** (operation hours of pfc-relay) **APF** (average power factor) **T-MAX** (max. temperature) **WPI / WPE** (counter active work import / export) **WQI / WQC** (counter reactive work inductive / capacitive)	**ULL** (voltage phase – phase) **ULN** (voltage phase – neutral) **THD U** (THD voltage) **I1** /**I2** / **I3** (current) **THD I 1 / THD I 2 / THD I 3** (THD current) **P1** / **P1** / **P1** (active power for each phase) **Q1** / **Q2** /**Q3** (reactive power for each phase) **S1** / **S2** / **S3** (apparent power for each phase) **P** (total active power) **Q** (total reactive power) **S** (total apparent power) **ΔQ1** (control deviation L1 in kvar) **ΔQ2** (control deviation L2 in kvar) **ΔQ3** (control deviation L3 in kvar) **ΔQ** (total control deviation in kvar) **CP1** (cosφ L1) **CP2** (cosφ L2) **CP3** (cosφ L3) **PF 1** (power factor Λ1 = P1/S1, kW/kVA) **PF 2** (power factor Λ2 = P2/S2, kW/kVA) **PF 3** (power factor Λ3 = P3/S3, kW/kVA) **F** (frequency) **T** (temperature at rear side of the device) **T-MAX** (max. temperature) **OPH** (operation hours of pfc-relay) **APF** (average power factor) **PF** (power factor Λ = P/S, kW/kVA) **WPI / WPE** (counter active work import / export) **WQI / WQC** (counter reactive work inductive / capacitive) **Rotary Field of current path**

2.2 HARMONICS

The LSB-T is permanently calculating the harmonics of the voltage and current by using Fourier transformation. After selecting the submenu these values are displayed separated in even and odd harmonics of current and voltage in main display area. Every displayed value is related to the fundamental wave.

Selection can be done by pushing the ◄►-key.
Scrolling is possible by pushing the ▲ / ▼-keys.

2.3 STEPINFO

Stepinfo shows the information, which is saved in step database. By pushing **+** -key, the step can be selected. By pushing ▼-key, the different saved values can be selected. These values are: type of step, switch cycles, actual capacitor size and derating of capacitor in percent.

2.3.1 STEP TYPE

Different types of steps are possible. With exception of the type **FAULTY**, the types can be set in SETUP/STEPS (2.5.4.2).

Possible types are:

- NORMAL = step is used for normal regulation
- FIX-OFF = step is permanently switched-off
- OFF = step is permanently switched-off an blend out
- FIX-ON = step is permanently switched-in
  (step will be switched-off in critical situations like over- and undervoltage, overtemperature or excessive harmonics)
- FAST = step is used for real-time algorithm. More information can be found in chapter 2.5.4.2 and 2.5.5.
- FAULTY = the step is detected as defective and is blocked

2.3.1.1 FAULTY STEPS

The detection of faulty steps is only possible, when the automatic step recognition is active (2.5.5.7) and switch cycle is at least 1 sec. When switch cycle is less 1 sec step recognition is automatic off. A step is “FAULTY”, when LSB-T cannot detect any change of reactive power at three switching operations in series of this step.

Faulty steps are signed with "F!" in the status columns. Furthermore the step type "FAULTY" is shown. Defective steps are blocked for the regulation. Faulty steps can be reset in SETUP/RESET (2.5.10.2), by interruption of supply voltage of LSB-T or automatically after 24 hours. Afterwards the step is used again for its regular control function.

2.3.2 SWITCH CYCLES

LSB-T is counting and showing the switching cycles of each step. This value allows the conclusion about the actual state of the contactors. Switch cycles can be preset separately for each step in SETUP/STEPS (2.5.4.3). Switch cycles of all steps is also reset, by a reset of complete capacitor database in SETUP/RESET (2.5.10.3).

2.3.3 STEPVALUE

As standard, the STEPVALUES are detected automatically during operation. They are rated to the setting of nominal voltage. In some special applications, it is required to set the step values manually. This can be done in SETUP/STEPS (2.5.4.4).

The STEPVALUE is showing the size of the capacitor, which is used for reactive power regulation. The function of this value can be compared with the c/k value of power-factor control relays of former generations. The STEPVALUE is shown in kvar. Each step has its own STEPVALUES, at LSB-T it's one per step, at LSB-T3phase there are three stepvalues per step (one for each phase). Step database is working with two values of capacitor size. The value which is shown in kvar is the actual value. This is continuosly corrected with every switching operation. A second value is saved after the first ten switch cycles of each step after a reset of step database. This value indicated the original available STEPVALUE. This value is used to calcuate the percentage of actual stepvalue to original stepvalue. This percentage gives very simple information about derating of the capacitor banks.

2.3.3.1 When automatic step recognition is not active, the percentage is not shown (2.5.5.7).

2.4 Quickstart SETUP

In this submenu basic settings can be made for the LSB-T. These settings are necessary for correct function and for correct display of the measurement values. This menu can be entered without password.

The following paramters can be set in Quickstart menue:

2.4.1 CHANGE LANGUAGE

Standard version of LSB-T is supporting English, German and French.

2.4.2 NOMINAL VOLTAGE

Function of the setting of nominal voltage is to make a definition about the nominal voltage of the system. The threshold levels for under- and overvoltage are based on this as well as the ratings of the capacitor sizes in step database, which are used for control and monitoring (2.5.3.7 and 2.5.3.8). The capacitor sizes, which are stored in step database, are also rated to the nominal voltage.

Independent of connection of the voltage measuring channel, nominal voltage is always the phase-phase voltage!

2.4.3 CT FACTOR

The CT FACTOR is the ratio of current transformer. (e. g. 1000/5 = ratio 200). At LSB-T3phase the CT-Factor is used for all three current channels.

For current measuring a CT always have to be used!

2.4.4 VT-FACTOR

VT FACTOR is the ratio of the voltage transformer. If the regulator is connected directly to the measurement voltage without VT the value 1 has to be used

2.4.5 START AI

Automatic initialization is switching all exits. During this test it can get information, which exits are working and it can correct the connection of the measuring channels for voltage and current by internal settings. Automatic initialization can be started only when the “happy face” is shown (voltage and current are ok) and when CONTROL is not set to satus OFF or FREEZE manually or by alarm-system. LSB-T3phase needs at least one 3ph. Capacitor-bank for AI! If CONTROL setting is FREEZE done by AI, then a resart is possible.

When AI is running, the status line of LSB-T shows the message: “AI ACTIVE”. The maximum number of switching operations during AI is 10 per exit (normally between 2 and 5). AI is taking care about the setting of discharge time for each exit. If there is a very long discharge time necessary, AI will take a certain time.The following messages from AI are possible:

- ALARM: AI OK
  AI is finished completely. Please check if all used exits are shown with their number in the display and please check if LSB-T is working correctly.
- ALARM: CHECK CTs (only LSB-T3phase) (CONTROL setting is: FREEZE)
  Following reasons are possible:
  Rotary field of current measuring is not clockwise or one or two current paths have wrong polarity.
- ALARM: STEPS (CONTROL setting is: FREEZE)
  Capacitors cannot be detected, because they are not controlled by controller or the rating is smaller as limit.
  LSB-T3phase: there is no 3ph. capacitor bank available!
- AI ABORTED (CONTROL setting is: FREEZE)
  AI couldn’t be finished. The reason could be permanent load variation during AI. Please try it again or do the settings manually.

AUTOMATIC INITIALIZATION is only able to work, when capacitors are used for compensation. If LSB-T has to switch reactors for compensation of capacitive load, this feature will cause failures. AI is working at best, when there are stable load conditions!

2.4.6 CONTROL ON / FREEZE / OFF

ON: Automatic control is running

FREEZE: Automatic control is stopped; status of exit relays is frozen

OFF: Automatic control is stopped; all exit relays are off

2.4.7 cosφ 1

This is the setting for target cosφ 1. It will be valid during normal operation.

2.4.8 SWITCH INTERVAL

The switch interval is the time delay between switching steps in regulation.

The switch interval has two different functions:

- Protecting the contactors by reducing the number of switching cycles.
- Building of the average of the reactive power in the time of the switch interval.

Step recognition is automatically set OFF, when switch interval is off.
In regulation mode LIFO, minimum switching interval is 1 sec longer, as the longest discharging time. In HV-version, the minimum switching time delay is 8.7 sec.

2.4.9 STEPS

2.4.9.1 STEP TYPE

For every single step its function can be defined separatly. You can select between the following functions:

- NORMAL = step is used for normal regulation algorithm
- OFF = step is permanently switched of an blend out in step indication
- FIX-OFF = step is permanently switched off
- FIX-ON = step is permanently switched on (step is supervised and also switched off in critical situations)

The step type "Fast" in only available for LSB-T with transistor exits. Steps, which are set "Fast" (only possible for transistor exits) are not available for the normal regulation algorithm. For each "Fast" step a nominal value has to be set, because the automatic step size detection is disabled in real time algorithm.

- FAST = step is used for the real time algorithm. All needed steps to reach the target cosφ are switched simultaneously. There is no delay for switching.

Not used output steps have to be set to "FIX-OFF" or "OFF". So it is ensured, that these steps are not used for the regulation anymore. No needless alarms are caused! Fix steps are labelled by the permanent symbol "!" next to the step number! Steps there are set "OFF" are blend out.

2.4.9.2 DISCHARGE TIME

For every single capacitor step an own discharging time can be defined. The discharging time is a blocking time, becoming active after switching off a step. As long as this time is running (display of "**!**" in the step indication) this step is not available for the regulation. Discharging time should be adapted to the capacitor discharging unit.

For step exits, which are switching thyristor switches, discharging time can be reduced to the zero.

2.5 SETUP

In this submenu advanced settings can be made for the LSB-T. These settings are necessary for individual parametring for special applications. To enter this submenu, please push the right button for 3 sec. It is protected by a password (factory setting 2402).

The menu is divided into logical groups. In these groups you can find paramters which are also in Quickstart SETUP. The following points explain the settings.

2.5.1 CHANGE LANGUAGE

Standard version of LSB-T is supporting English, German and French.

2.5.2 START AI

See Chapter 2.4.5

2.5.3 MEASUREMENT

2.5.3.1 CT-FACTOR

The CT FACTOR is the ratio of current transformer. (e. g. 1000/5 = ratio 200). At LSB-T3phase the CT-Factor is used for all three current channels.

For current measuring a CT always have to be used!

2.5.3.2 VT-FACTOR

VT FACTOR is the ratio of the voltage transformer. If the regulator is connected directly to the measurement voltage without VT the value 1 has to be used.

2.5.3.3 NOMINAL VOLTAGE

Function of the setting of nominal voltage is to make a definition about the nominal voltage of the system. The threshold levels for under- and overvoltage are based on this as well as the ratings of the capacitor sizes in step database, which are used for control and monitoring (2.5.3.7 and 2.5.3.8).

Independent of connection of the voltage measuring channel, nominal voltage is always the phase-phase voltage!

2.5.3.4 CONNECTION MEASUREMENT

CONNECTION MEASUREMENT the setting if measuring of voltage is connected between two phases or between phase and neutral phase. It is normally detected automatically at every start of LSB-T. This is done by comparing the setting NOMINAL VOLTAGE and the real measured voltage.

The selection can also be done manually by pushing the ◄► button. The types, "U=L-N" or "U=L-L" are available.

2.5.3.5 SYNCHRONISATION FREQUENCY

For a high precision of the measurement, the sampling rate has to be synchronized to the frequency of the grid. Caused by commutation notches of mainsvoltage it is possible that the automatic synchronizing will not work reliable. This creates failures in measurement. To avoid these problems, the following settings can be done:

Automatic synchronizing:

For best measurement results, when mainsvoltage is without commutation notches.

FIX-50HZ: For a safe operation at 50Hz grid with bad mains quality.

FIX-60HZ: For a safe operation at 60Hz grid with bad mains quality.

2.5.3.6 PHASE COMPENSATION

The phase compensation enables the user to connect the current- and voltage measurement channels in any way. This compensation angle complies with the phase angle between connected active current and voltage. The following table shows the settings for some different connection types. **This setting has to be made correct, because otherwise correct regulation is not possible! If the current transformer is connected inverted, additionally a phase compensation of 180° has to be respected.**

Voltage	L1-N	L2-N	L3-N	L1-N	L2-N	L3-N	L1-N	L2-N	L3-N
Current transformer	L1	L2	L3	L2	L3	L1	L3	L1	L2
Connection	U=L-N	U=L-N	U=L-N	U=L-N	U=L-N	U=L-N	U=L-N	U=L-N	U=L-N
Phase-Offset	0°	0°	0°	240°	240°	240°	120°	120°	120°
Voltage	L2-L3	L3-L1	L1-L2	L2-L3	L3-L1	L1-L2	L2-L3	L3-L1	L1-L2
Current transformer	L1	L2	L3	L2	L3	L1	L3	L1	L2
Connection	U=L-L	U=L-L	U=L-L	U=L-L	U=L-L	U=L-L	U=L-L	U=L-L	U=L-L
Phase-Offset	0°+90°	0°+90°	0°+90°	240°+90°	240°+90°	240°+90°	120°+90°	120°+90°	120°+90°

At LSB-T*3phase* only the position of the voltage measurement can be compensated, because the regulator calculates the phase angle for the other phase from phase L1.

2.5.3.7 V-TOLERANZ MIN

The setting has to be done in percent related to the nominal voltage. If the measurement voltage falls below the adjusted limit, all active steps are switched off and the regulation stops.

2.5.3.8 V-TOLERANZ MAX

The setting has to be done in percent related to the nominal voltage. If the measurement voltage exceeds the adjusted limit, all active steps are switched off and the regulation stops.

2.5.3.9 COUNTDOWN START AI

YES = after starting LSB-T, a countdown is running. During this countdown it is possible to start AI automatic initialization by pushing <Enter>.

NO = the countown is not shown. To start AI, you have to choose Quickstart SETUP.

2.5.3.10 TEMP. OFFSET

The temperature offset allows correction of temperature reading in a range -10°C to +10°C.

2.5.3.11 CT TYPE 1A

This setting changes some internal threshold levels, to optimize the function with 1Amp CTs.

2.5.4 STEPS

Settings concerning the step data base can be found in this submenu. The following settings are possible:

2.5.4.1 DISCHARGE TIME

For every single capacitor step an own discharging time can be defined. The discharging time is a blocking time, becoming active after switching off a step. As long as this time is running (display of "**!**" in the step indication) this step is not available for the regulation. Discharging time should be adapted to the capacitor discharging unit.

For step exits, which are switching thyristor switches, discharging time can be reduced to the zero.

2.5.4.2 STEP TYPE

For every single step its function can be defined separatly. You can select between the following functions:

- NORMAL = step is used for normal regulation algorithm
- OFF = step is permanently switched of an blend out in step indication
- FIX-OFF = step is permanently switched off
- FIX-ON = step is permanently switched on (step is supervised and also switched off in critical situations)

The step type "Fast" in only available for LSB-T with transistor exits. Steps, which are set "Fast" (only possible for transistor exits) are not available for the normal regulation algorithm. For each "Fast" step a nominal value has to be set, because the automatic step size detection is disabled in real time algorithm.

- FAST = step is used for the real time algorithm. All needed steps to reach the target cosφ are switched simultaneously. There is no delay for switching.

Not used output steps have to be set to "FIX-OFF" or "OFF". So it is ensured, that these steps are not used for the regulation anymore. No needless alarms are caused! Fix steps are labelled by the permanent symbol "!" next to the step number! Steps there are set "OFF" are blend out.

2.5.4.3 SWITCH CYCLES

The number of switch cycles can be corrected or reset for ech step separately.

2.5.4.4 STEP NOMINAL VALUE

If STEP RECOGNITION is not active, it is required to do this setting, to get proper function of the relay. STEP RECOGNITION is not active for “Fast” steps or if it is blocked (2.5.5.7) or for switch cycles less 1 sec.

The size of the capacitors can be programmed manually in kvar.

The programming can be done for each step individually in kvar. So there is no special sequence necessary. A step can be programmed as a capacitor (c) or as an inductor (i). If you plan to use a mixed mode between capacitors and inductors, please contact VMtec to get more information.

At LSB-T3phase capacitor size has to be programmed for each phase individually. A three phase capacitor with 25kvar has to be programmed with 8,3kvar for each phase!

2.5.4.5 STEP RESET

Selecting this point all step sizes can be reset individually.

2.5.5 CONTROL

General explanations for a better understanding:Target of compensation: LSB-T is using two parallel

~~working regulation algorith~~ms. The type of steps
defines the algorithm by which each step is controlled.

Normal algorithm is using “NORMAL” steps. The target of regulation of normal algorithm is calculated by target cosφ and apparent power of fundamental wave. The control deviation is a mean value over the periode of SWITCH INTERVAL (adjustable).

In hybrid compensation panels, the installed dynamic steps are considered in calculation of control deviation to get an optimum working point for the real time part.

Fast algorithm is using “FAST” steps. The target of regulation of fast algorithm is the real time target reactive power, which is calculated by apparent power and target cosφ. The operation of Fast algorithm can be tuned by additional parameters.

At LSB-T*3phase*, the fast algorithm is not available. For real time compensation there is used the normal algorithm with short SWITCH INTERVAL and fix programmed stepsizes!

Regulation mode normal algorithm: 4 different regulation modes are available at LSB-T:

1. **Auto:** The controller is working with the principle of „Best Fit“. Before a switching operation, all capacitor-sizes in step database are compared with control deviation. The available step which gives the best results will be switched.
2. **LIFO:** “Last In, First Out” The controller starts with regulation with step 1 and is switching further exits step-by-step. Switching-off is done vice versa.
3. **Combined Filter:** Special algorithm for combined filter banks with two different detuned ratings. The controller is working like in automatic mode with the principle “Best Fit”. From odd numbered steps, there is at least or more of the capacitance connected as from even numbered steps.
4. **Progressive:** Similar to **Auto** mode. When control deviation is bigger as the biggest available step, the all further steps are switched in intervals of two seconds. If the setting of switch interval is less two seconds, all further steps are switched in intervals of one second.

Regulation mode real time algorithm: After measuring one cycle of mains voltage, the control deviation is calculated and all necessary steps are switched in one operation. The time from end of measuring to generation of the switching pulse is less 150µsec. VMtec thyristor-switches need from this moment to bring in the capacitors in max 2/3 of a cycle of mains voltage. This time is needed to to get the next allowed moment for switching operation.

In real time algorithm SWICTH INTERVAL, STEP EXCHANGE and SWITCH CYCLES BALANCING are not working. There are some separate settings possible. The real time algorithm is always working in “Best Fit” mode.

Sensitivity: (switching threshold) Sensitivity is the switching threshold for switching-on or switching-off the capacitors in percent (%). The range of the sensitivity can be between 55% and 100% (factory setting is 60%. Due to this, the in following explanation 60% is used.).

Sensitivity is used for two checks:

1. The controller is using sensitivity to check, if a switching operation is necessary or if it’s possible. If the demand for compensation is bigger as 60% of the smallest for regulation available step, LSB-T is selecting from step database, if there are suitable steps to switch.
2. To avoid hunting, the controller is only using steps, which will not overshoot more than 40% (100%-60%) of its size.

Step exchange: Step exchange is supporting automatic control and combined filter control algorithm to reach an optimum result. If the controller detects that target-pf is not reached it starts searching for a step which gives better results. If step exchange is active, the controller can replace a switched-in step against a step which matches better, to reach the target.

Switch cycle balancing: Switch cycle balancing is taking care that steps with similar sizes (tolerance can be programmed in percent) are used in a way, that they have the same number of switch cycles. At selection of suitable step for next switching operation, the values of switch cycles, which are saved in step database, are compared. A balanced attrition of contactors and capacitors is assured by this.

Settings concerning control functions can be found in this submenu. These settings are available:

2.5.5.1 CONTROL ON / FREEZE / OFF

ON: Automatic control is running

FREEZE: Automatic control is stopped; status of exit relays is frozen

OFF: Automatic control is stopped; all exit relays are off

2.5.5.2 COS PHI 1

This is the setting for target cosφ 1. It will be valid during normal operation.

2.5.5.3 COS PHI 2

This is the setting for target cosφ 2. It will be valid when a switch over is caused by the digital input or an-other programmable action.

2.5.5.4 SWITCH INTERVAL

The switch interval is the time delay between switching steps in regulation.

The switch interval has two different functions:

- Protecting the contactors by reducing the number of switching cycles.
- Building of the average of the reactive power in the time of the switch interval.

Step recognition is automatically set OFF, when switch interval is off.
In regulation mode LIFO, minimum switching interval is 1 sec longer, as the longest discharging time. In HV-version, the minimum switching time delay is 8.7 sec.

2.5.5.5 SWITCH INTERVAL STEP EXCHANGE

For step exchange a separate switch interval is used. This is the delay-time between switching-off an active step and switching-in the next step to get a better power-factor. Step exchange can be set active in menu 2.5.5.10.

2.5.5.6 ASYM. FACTOR

ASYMMETRY FACTOR of switch interval. The factor is the ratio between switch interval for switching on and switching off. Switch interval for step exchange is not affected by this setting.

X= 1 = equal

X = +2 to +127: delay switching off = switch interval multiplied by X

X = -2 to -127: delay switching on = switch interval multiplied by X

2.5.5.7 STEP RECOGNITION

Pushing ◄►-key is changing between "ON" and "OFF".

"Step recognition OFF": Capacitor sizes should be programmed manually:

a) When fast-oscillating load influences automatic stepsize recognition.
b) When recognition of defective steps is not wished
c) When capacitor contactors are switching with a delay of more than 200msec.

"Step recognition ON" Stepsizes are detected and corrected automatically during normal operation. “Step recognition ON” is the factory setting. It allows monitoring of capacitor sizes and gives alarms when they are faulty. Stepsizes which are programmed manually will be overwritten by step recognition.

2.5.5.8 SWITCH CYCLES BALANCING

Pushing ◄►-key is changing between "ON" and "OFF".

Balancing of switch cycles of capacitors with similar sizes produces an equal attrition of the contactors and capacitors.

2.5.5.9 SWITCH CYCLES BALANCING %

Capacitors within this tolerance band are capacitors with similar sizes for switch cycles balancing.

2.5.5.10 STEP EXCHANGE

Pushing ◄►-key is changing between "ON" and "OFF".

This function helps to reach target cosφ more exactly, when capacitors have different sizes. If all capacitor banks have the same size, this function makes no sense and in sme conditions the relay can start hunting.

2.5.5.11 CONTROL SENSITIVITY

Factory setting is 60%. This value can be set in a range between 55% and 100%.

2.5.5.12 CONTROL

Four control modes can be selected:

AUTO: "Best Fit"

LIFO: "Last in, first out".

1. **Threshold level of each step is checked separately. If steps have different sizes, this can cause inaccuracy.**
2. **Step recognition is working in this mode as well, when it is active. If steps are detected as defective, they are skipped in this mode. If this is not accepted, the step recognition has to be set "OFF" and capacitor sizes have to be programmed manually.**

Combi - Filter: This setting assures that in combined filters the connected power with higher degree of choking is higher as the power with lower degree of choking.

Capacitors with higher degree of choking must be connected to the odd exits. Capacitors with smaller degree of choking must be connected to the even exits.

Progressive: If more than one step is needed to reach target, the setting of switch interval is only valid for the first switching operation and the following steps are connected in short intervals.

2.5.5.13 Q OFFSET

OFFSET of reactive power in kvar. This feature allows compensating a permanent reactive load, which cannot be measured (e.g. a transformer).

The offset of reactive power affects the readings of the following measuring values: current, reactive power, control deviation, apparent power, power factor PF and cosφ.

2.5.5.14 I < LIMIT FREEZE STEPS

Yes: If current is detected as zero, the regulator is freezing all the steps until it can measure current again.

No: If current is detected as zero, the regulator is switching-off the capacitors step by step with intervals of 30 sec, to check for a broken cable until it can measure a current again.

2.5.5.15 Q CAPACITIVE STEPS TURN OFF

Disconnecting capacitors in leading power factor condition.

The following items are only affecting real-time mode!

2.5.5.16 FAST CONTROL MEASURING BREAK

After switching operations, voltage and current are oscillating. Measuring break shall avoid wrong measuring values after a switching operation.

This setting should be done carefully, because dependent on ambient conditions the compensation unit can hunt, when this setting is too small.

2.5.5.17 FAST CONTROL MAX. STEPSIZE

This setting limits the maximum capacitor power which can be switched-in in one switching operation. If too much capacity is switched-in in one operation, this can cause unmeant reactions in grid.

The setting is done in kvar. If the setting is “0” (factory setting), there is no limitation.

2.5.5.18 FAST CONTROL AVERAGE Q

The number of mains cycles which are used to build the average of control deviation. Start for building the average is after the measuring break is finished (2.5.5.16).

2.5.5.19 FAST CONTROL SYNC. IMP.

YES: the trigger pulse for switching the thyristor-switches is synchronous to the zero-crossing of the mains-voltage (rising sinus). This can cause a delay of the switching operation which is less one mains cycle.

NO: the trigger pulse for switching the thyristor-switches is coming directly after finishing the measuring of one periode + run time for the algorithm (some µsec).

2.5.6 DISPLAY

In this submenu settings can be made according the display. The following settings are possible:

2.5.6.1 Display

The following masks can be selected for the top display area by pushing the ◄►-key. This masking is permanently displayed. After leaving this submenu the setting is stored automatically. The following masks can be selected:

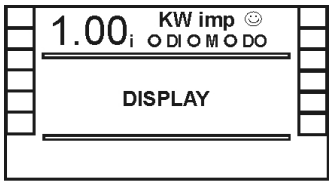

Cos φ, DI, M, DO: Display of power factor and status of inputs and outputs (○=inactive, ●=active)

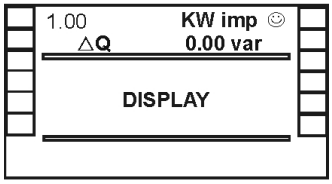

Cos φ, ΔQ: Display of power factor and control deviation

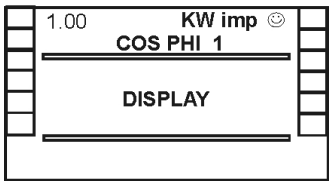

Cos φ, valid Target cos φ (1 or 2): Showing of power-factor and of the active target power factor (e.g. tariff switching with digital input).

2.5.6.2 Contrast

The contrast of the LCD-display can be adjusted by pushing the **+** / **-** keys. After leaving this submenu the setting is stored automatically.

2.5.6.3 Password

By pushing the **+** / **-** keys the password can be changed. Reaching the last digit the new password is stored by pushing the ◄┘-key.(set the password to 0000 the password protection is switched off)

2.5.7 ALARM

In the following chapter all adjustable Alarms including trigger are listed.

Control alarm	**Trigger** after 50x switching time not reaching the target cosφ and ΔQ > smallest step (over-/under compensation)
No current	**Trigger:** I < 15mA **Reaction:** switch off steps to reach current flow or freeze (2.5.5.14)
Step fault	**Trigger:** step size detection not possible **Reaction:** alarm after three not successful trials in series (alarm delay 300 sec)
Step warning	**Trigger:** a) Stepsize falls below an adjustable level (delay 300 sec). This level is percentage between stepsize and nominal stepsize in step-database b) switch cycles exceeding the adjustable limit for switch cycles.
COS PHI	**Trigger:** The actual cosφ is outside the adjustable range between c0.80 and i0.80. The delay time can be adjusted from 1s to 36000s.
Harmonics U	**Trigger:** THD U exceeds the adjusted limit between 1% and 99.9%.
Harmonics I	**Trigger:** THD I exceeds the adjusted limit between 1% and 99.9%.
Overload P	**Trigger:** amount of P exceeds the adjustable limit between 1kW and 99.9MW
Overload Q	**Trigger:** amount of Q exceeds the adjustable limit between 1kvar and 99.9Mvar
P-export	**Trigger:** alarm will be triggered as soon as kW export is recognized
Temp1 / Temp2:	**Trigger:** ambient temperature exceeds the adjusted limit.
DI Input:	**Trigger:** voltage signal at terminals DI1.1 and DI1.2. Possible settings are HIGH active (voltage > 50V AC) and LOW active (voltage < 50VAC).
Over current:	**Trigger:** I > 6Amps **It's not possible to deactivate this alarm.** LSB-T always generates a signal via the display and alarmrelay.
Frequency alarm:	**Trigger:** frequency is out of allowed range (max. range 45 – 65Hz, delay 10sec).
Over/Undervoltage:	**Trigger:** Voltage is out of range. The limits depend on setting for nominal voltage and on tolerance settings (2.5.3.7/ 2.5.3.8). **It's not possible to deactivate this alarm, but a bigger tolerance can be set!** In case of this alarm, the control stops, all steps are disconnected, the alarmrelay gives signal and the “sad face” is shown.

2.5.7.1 Alarmevents

M relay: volt free alarm output with C/O contacts. The relay is normally active and gives signal when it drops. Max fuse 6A, breaking capacity 250V AC / 5A

DO relay: digital output with N/O contact. The contact can be set to N/O or N/C function. Max fuse 6A, breaking capacity 250V AC / 5A

Display: Shows Alarm in Display:

Control freeze: All steps are frozen, control is stopped

Control off: All steps are switched off, control is stopped

Cos phi 2: Switch to a second target cosφ.

Fast Control: immediate switching-off (only available for fast steps and Harmonic U alarm)

In the drawing stated below is showed how the enabled alarm shown on display

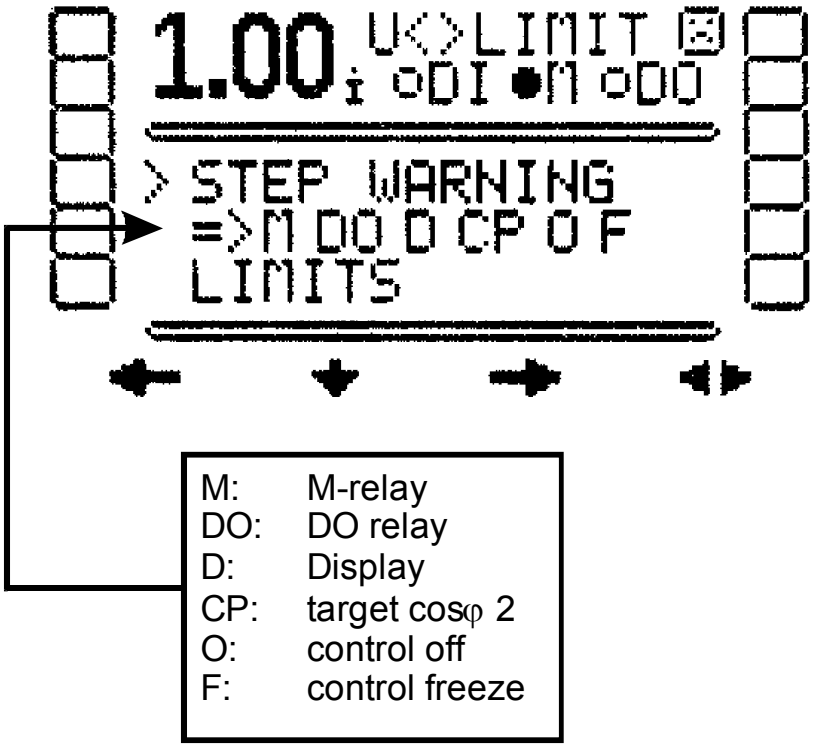

2.5.8 MODBUS

This submenu is only enabled when the regulator is equipped with the Modbus interface. The following settings are possible:

- **BAUD RATE**: The baud rate can be selected by pushing the ◄►-key. The valid range is between 1200 and 38400.
- **PARITY**: The parity can be selected by pushing the ◄►-key. The following settings are possible: 8E1 (8 data bits/even parity/1 stop bit), 8O1 (8 data bits/odd parity/1 stop bit) and 8N2 (8 data bits/no parity/2 stop bits)
- **ADDRESS**: By pushing the ►-key it is possible to enter the slave address (slave ID). The valid range is between 1 and 247.

The settings for baud rate and parity must be the same for all bus devices. The address must be unique for each device.

2.5.9 DATALOGGER

This submenue is only avaialble when the regulator is equipped with datalogger. To use datalogger, some settings are required. These settings are: date, time, storage interval, synchronisation to digital input and trigger of digital input.

2.5.9.1 Date and time

Format of date: dd-mm-yy
Format of time: hh:mm (seconds are running in a separate line)

2.5.9.2 STORAGE INTERVAL

The storage interval can be set from 1 to 720 minutes.
A setting of 0 stops datalogging of measuring values.

2.5.9.3 SYNCHRONISATION

The storage interval can be synchronized to other devices. This happens by a trigger signal to digital input DI0.1/DI0.2 (3.10). To use the synchronization, it is required to select the correct storage interval. The tolerance is 20 sec. When within the time of storage interval + 20 sec LSB-T cannot detect a trigger signal, it will give a failure message. If the trigger signal comes earlier as the end of interval, then the interval is fin-ished with trigger signal.

2.5.9.4 SETUP DI Input

The digital input can be triggered to two conditions:

- HIGH: rising edge
- LOW: falling edge

2.5.10 RESET

2.5.10.1 RESET SETUP

Reset of LSB-T to factory settings without step database.

2.5.10.2 RESET FAULTY STEPS

Reset of steps, which are detected as faulty, back to automatic mode.

2.5.10.3 RESET STEPS

Reset of step database. This affects the following values: steptyp, stepsize, switch cycles, discharge time.

2.5.10.4 RESET WORK COUNTER

Reset of KWh and kvarh counters.

2.5.10.5 RESET OPH

There is a possibility to change the setting for operation hours or to set them to zero.

2.5.10.6 RESET APF

Reset of average PF.

2.5.10.7 RESET T-MAX

Reset of the temperature maximum, which was measured.

2.5.10.8 DATALOGGER DELETE

Deletes all saved values in datalogger.

2.6 MANUAL

To enter in manual mode, please select “manual” in main menue and push ► for 3 seconds. The automatic control is stopped and the exits can be switched manually. By the means of the **+** -key the referring step can be selected. Changing the switching state is possible by pushing the ◄►-key.

Manual switching is only possible when measurement voltage is in allowed range. Otherwise over- and undervoltage protection will block this function. After switching off an active step the discharging time is active. Only after this time is over the step can be switched on manually again.

Difference to versions before 2.7.0:

- during the manual mode the automatic control is stopped
- when you are leaving manual mode, the connected steps will be not disconnected
- the test-mode which allows switching capacitors when voltage and current are out of range is removed

2.7 DATALOGGER (option –DM)

2.7.1 SETUP-HISTORY

Setup history gives infromation about the last 64 settings. It is working as ring-buffer, so the oldest information is overwritten.

Setup history gives information about date and time and type of paramter which is changed. By pushing the ◄►-key, you can change to the values. On top line you can see the actual value the bottom line shows the former value of the modified parameter.

2.7.2 ALARM-HISTORY

Alarm history gives information about the last 64 alarm states. It is working as ring-buffer, so the oldest information is overwritten. It shows release and reset of alarms.

Alarm history gives information about date and time and type of alarm.
By pushing the ►-key, you can see the reason of the alarm. On top line you can see the value in the moment when alarm comes, the bottom line shows the threshold level of alarm.
By pushing the ►-key again, you get informations about the current and voltage in the moment of alarm.

2.7.3 Logging of measurings

LSB-T can log upto 3072 sets of measurings with date and time. The interval can be set from 1 minute to 720 minutes (0=stop logging). Alternatively, there can be use the digital input (3.10) of data-logger to syn-chronize the log-interval to other applications. It is working as ring-buffer, so the oldest information is over-written. To download logged measurings, please use TTL interface and software “Data_log”. Data can be stored as CSV – file. For analysis of data you can use common available spreatsheet software.

2.7.4 Logging of system information

LSB-T can log upto 512 sets of system information with date and time (enough for 1,4 years). It is working as ring-buffer, so the oldest information is overwritten. This log happens every day at 23:59:59. System information are: kWh, kvarh, number of switching operations per exit, capacitor size, average PF, average PF of last 24h. This logging is always active.

To download logged information, please use TTL interface and software “Data_log”.
Data can be stored as CSV – file. For analysis of data you can use common available spreatsheet software.

2.8 DEVICE INFO

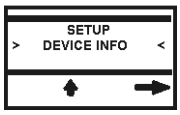

Device type: e.g LSB-T

Softwareversion: e.g. VER 02.07.00

FLG: e.g. 3I MB DL

3 Wiring diagrams LSB-T

3.1 LSB-T06/12R

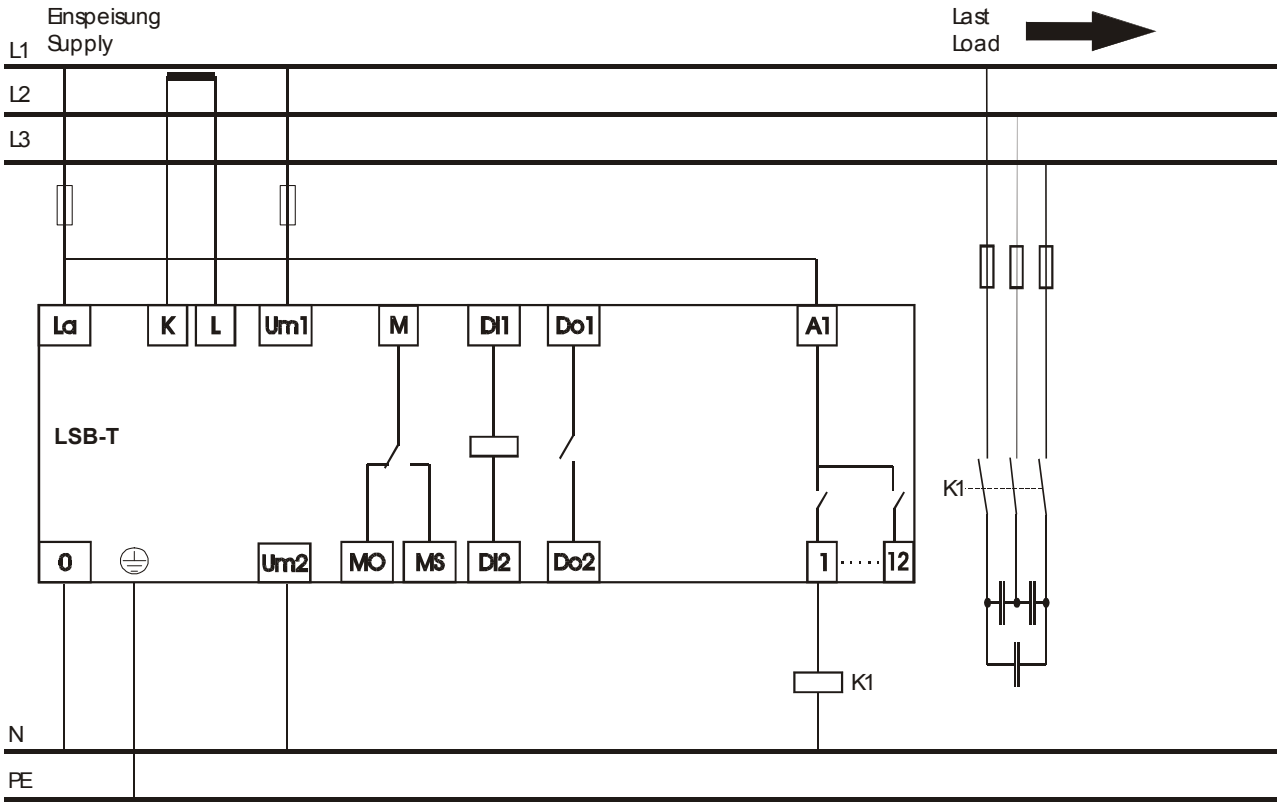

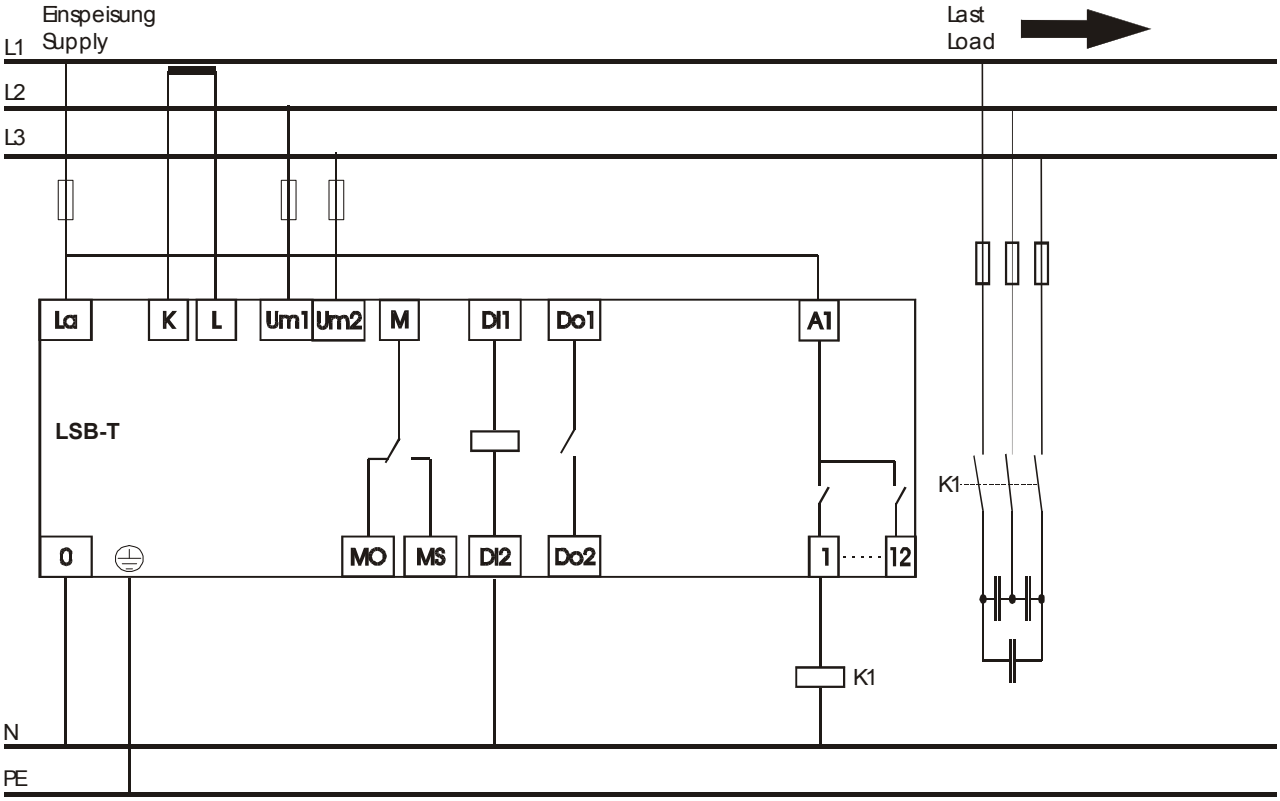

3.2 LSB-T06/12T

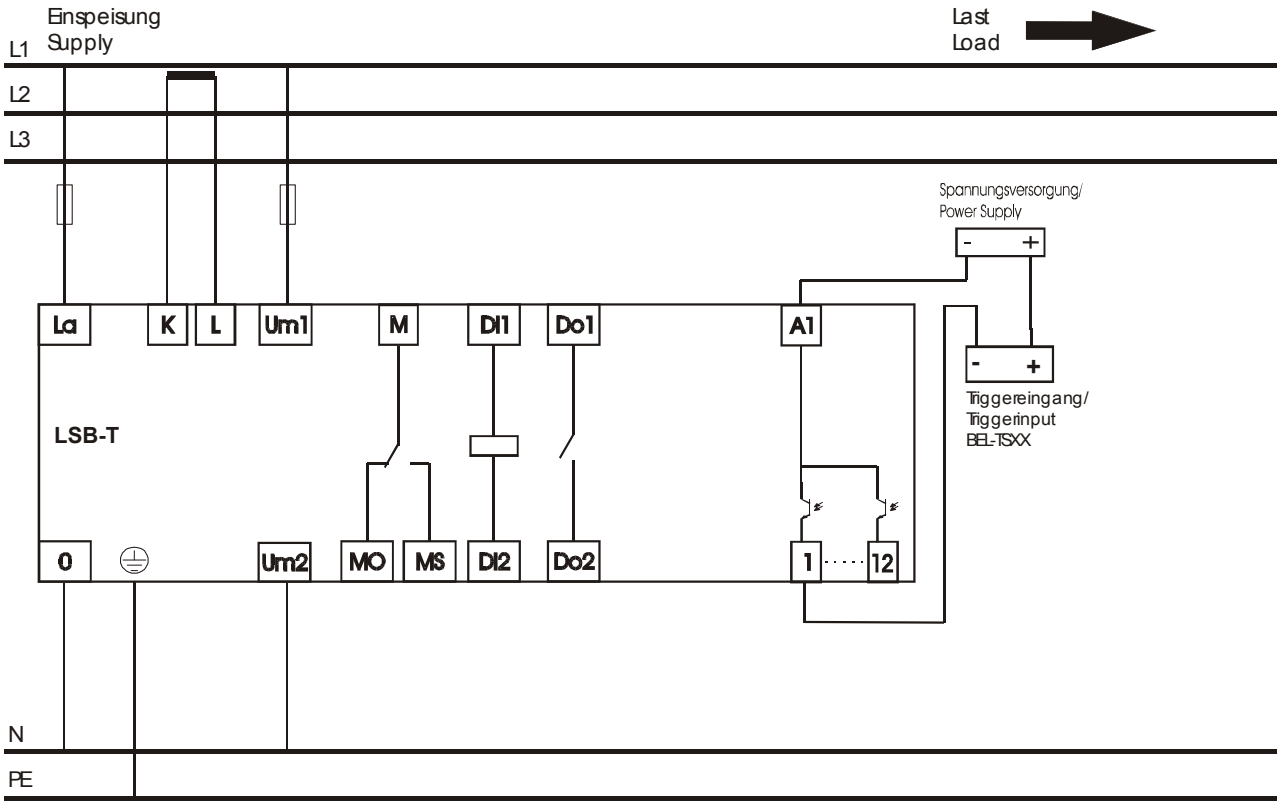

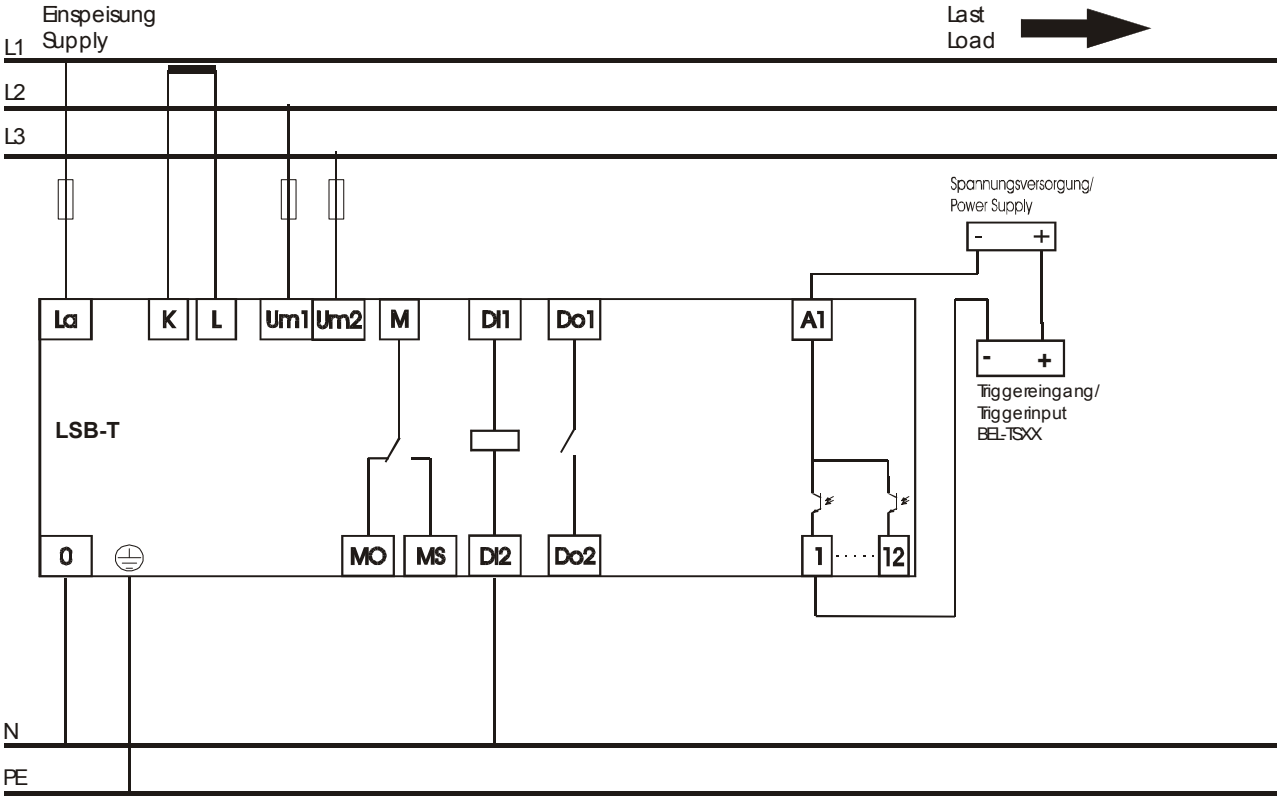

3.3 LSB-T12RT

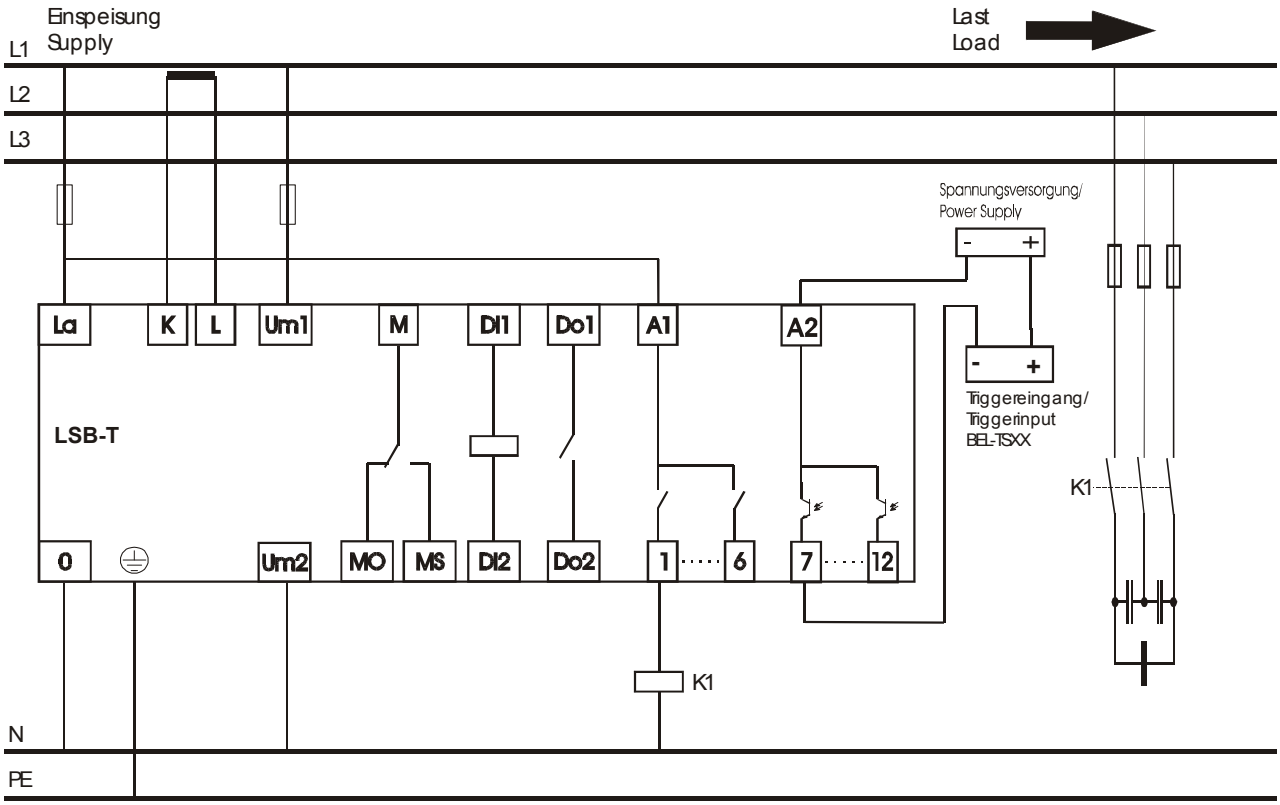
Einspeisung
Supply
Last
Load
L1
L2
L3
Spannungsversorgung/
Power Supply
La
K
L
Um1
M
DI1
Do1
A1
A2
LSB-T
Triggereingang/
Triggerinput
BEL-TSXX
K1
0
Um2
MO
MS
DI2
Do2
1
6
7
12
K1
N
PE

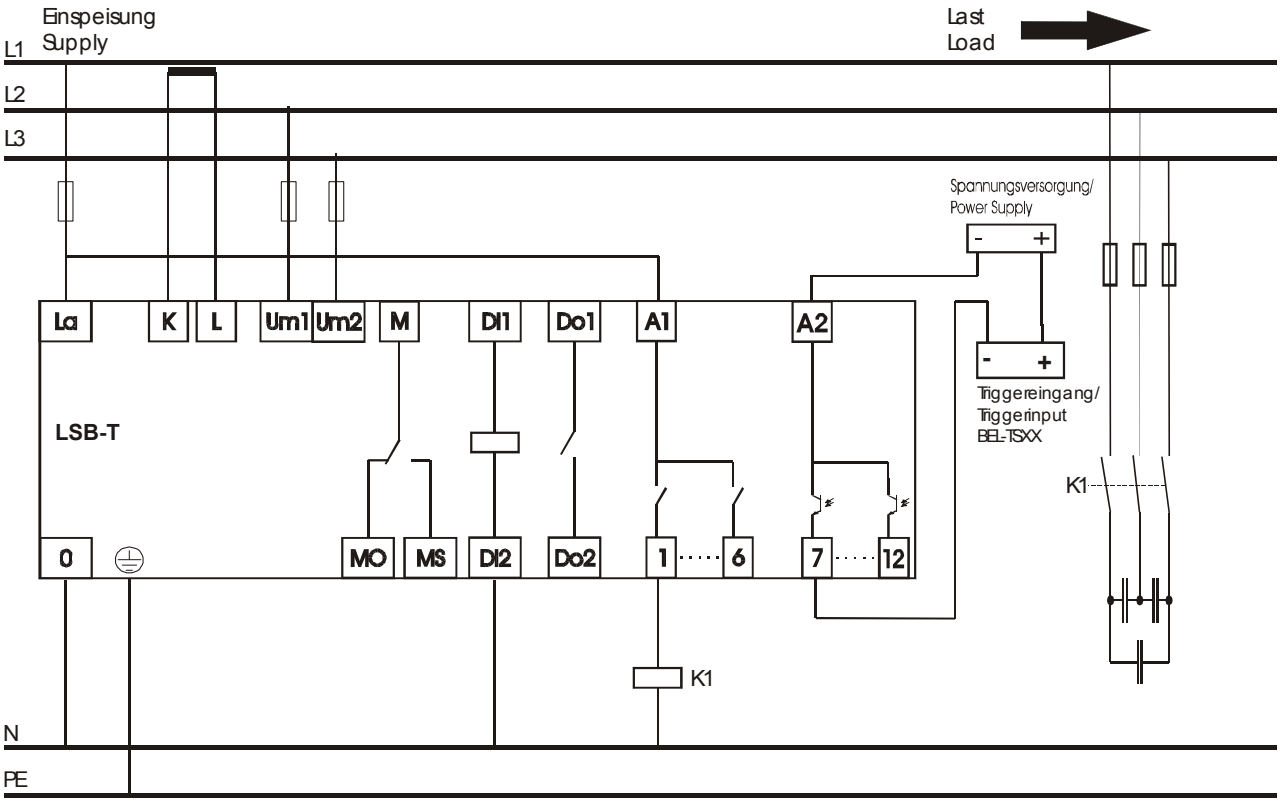
Einspeisung
Supply
Last
Load
L1
L2
L3
Spannungsversorgung/
Power Supply
La
K
L
Um1
Um2
M
DI1
Do1
A1
A2
LSB-T
Triggereingang/
Triggerinput
BEL-TSXX
K1
0
MO
MS
DI2
Do2
1
6
7
12
K1
N
PE

3.4 LSB-T06/12R-3A (LSB-T*3phase*)

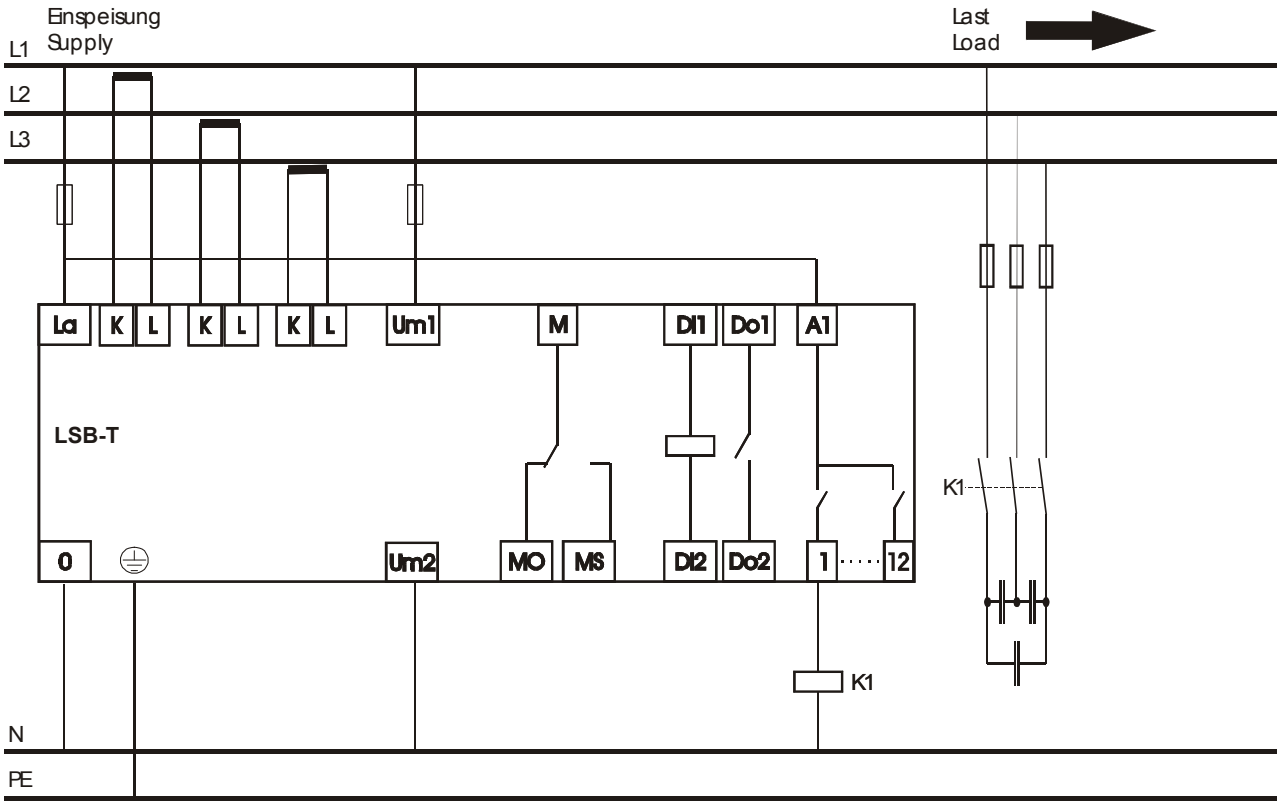

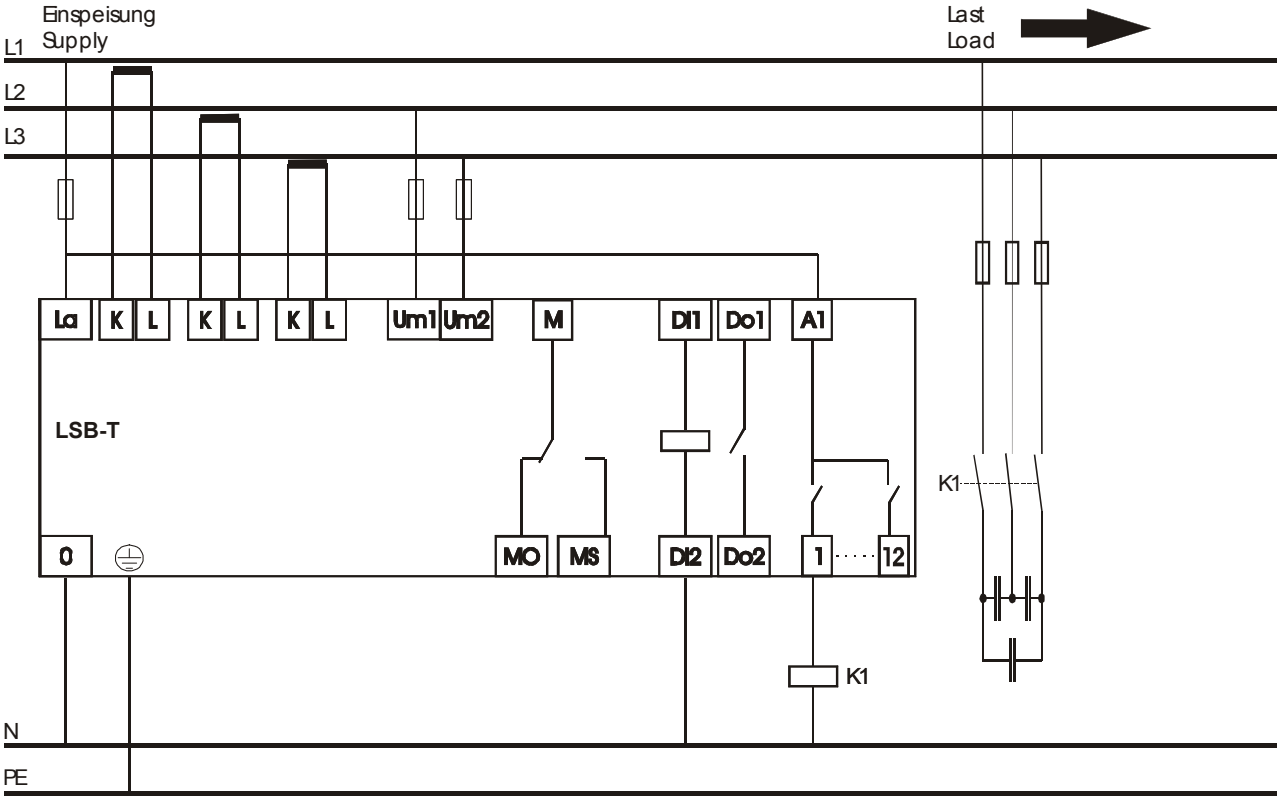

3.5 LSB-T06/12T-3A (LSB-T*3phase*)

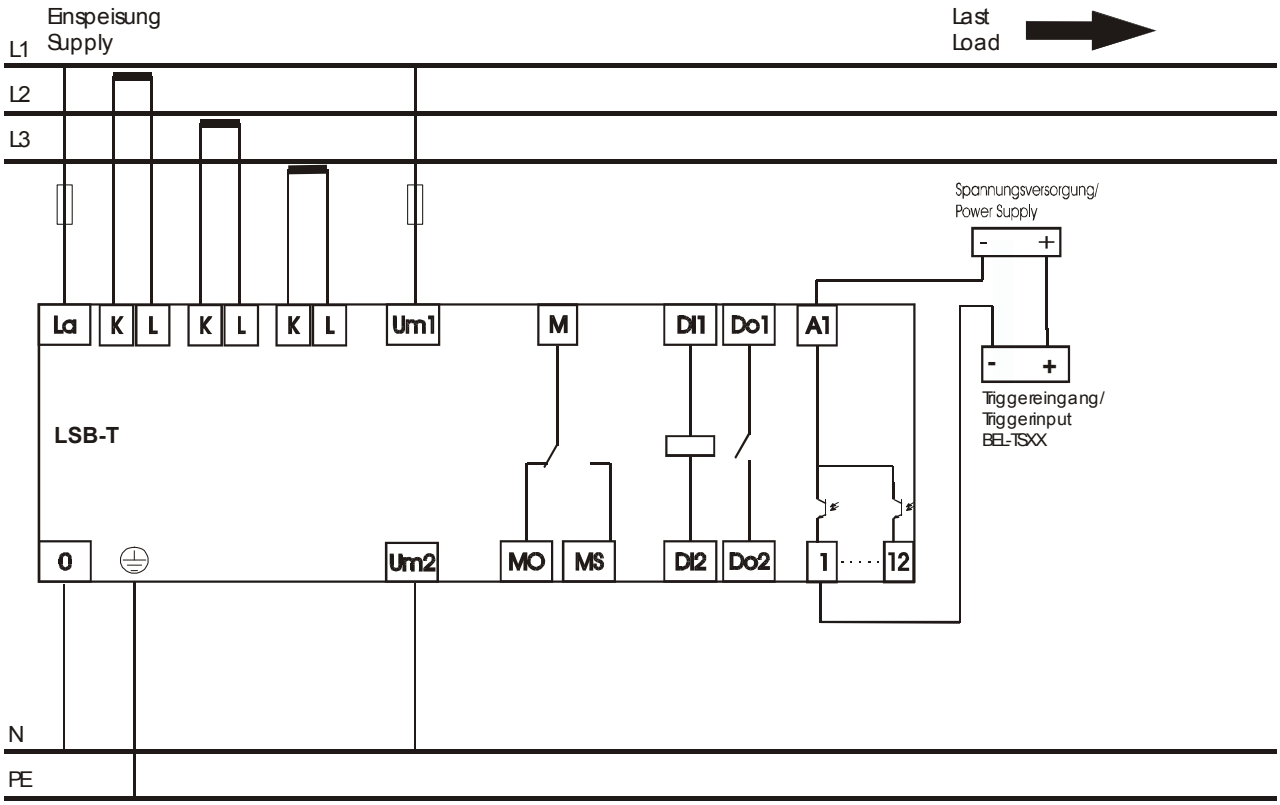

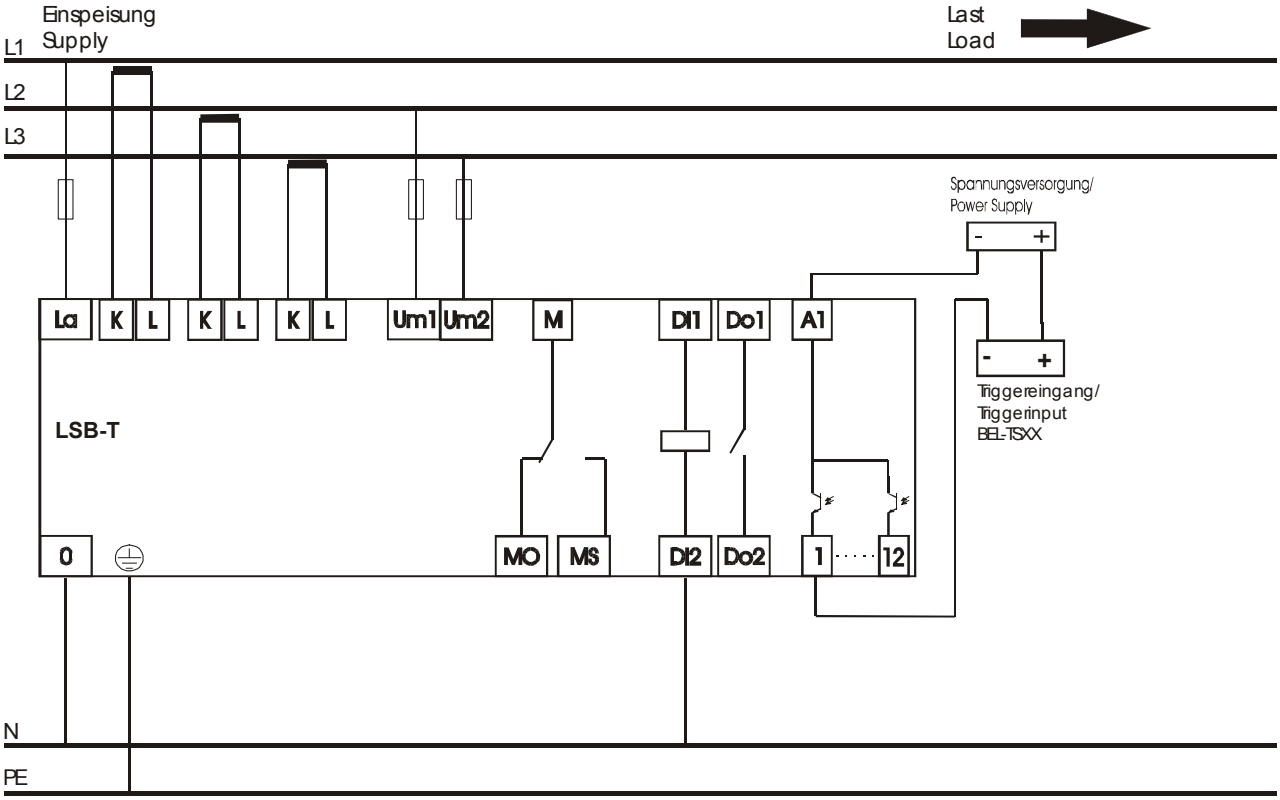

3.6 LSB-T12RT-3A (LSB-T*3phase*)

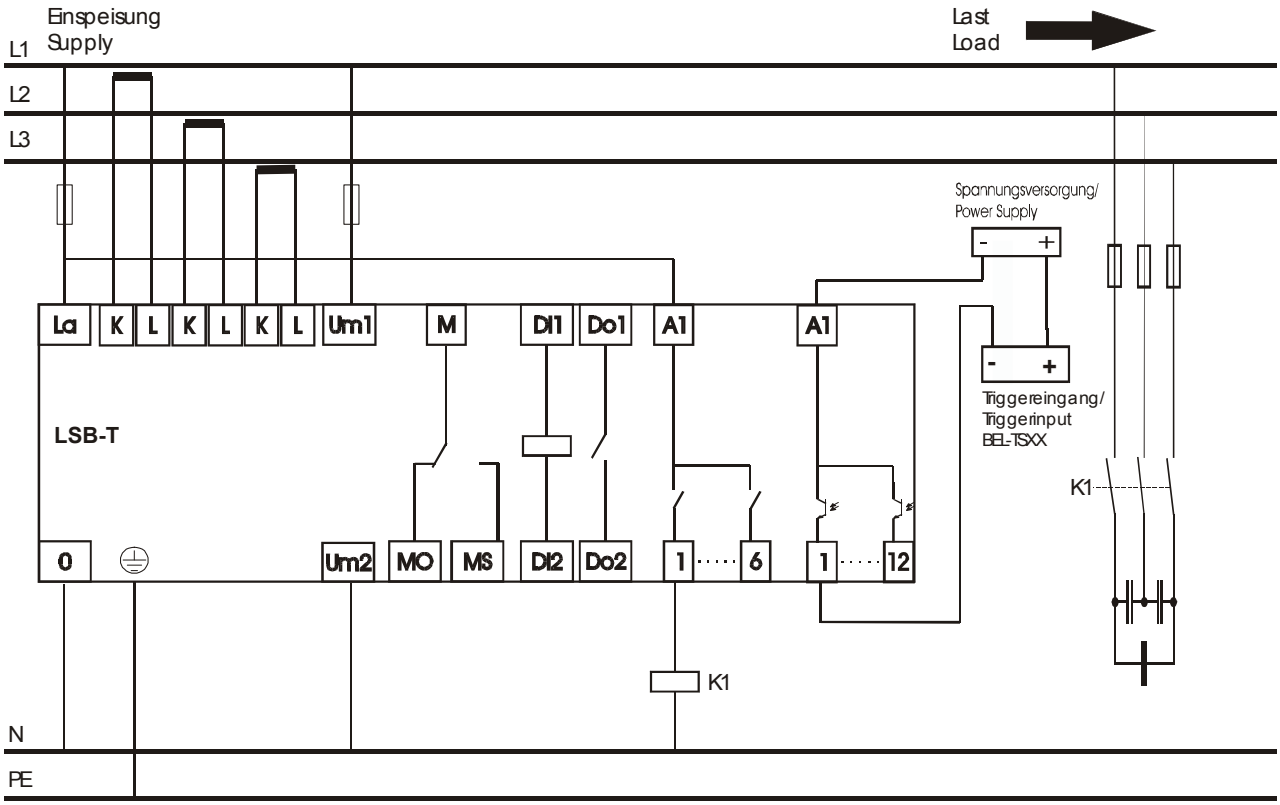

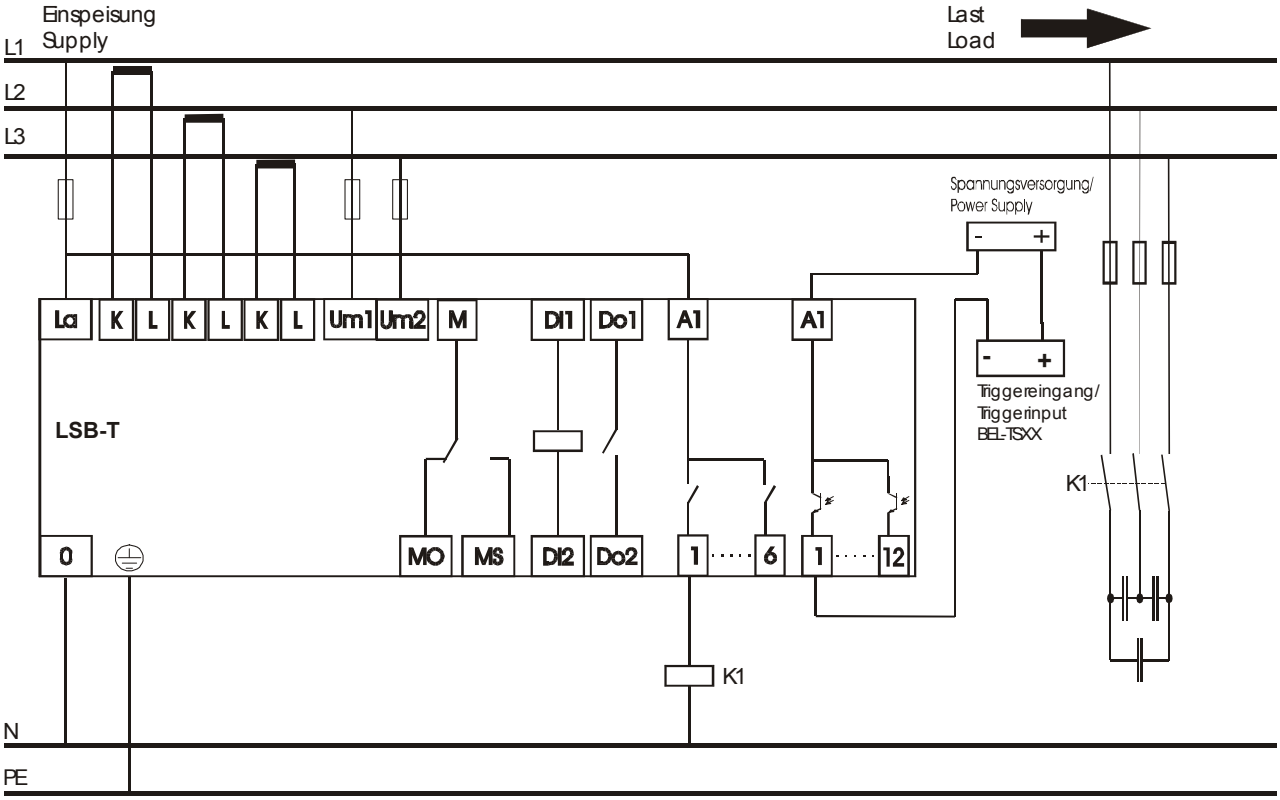

3.7 LSB-T06/12R-HV

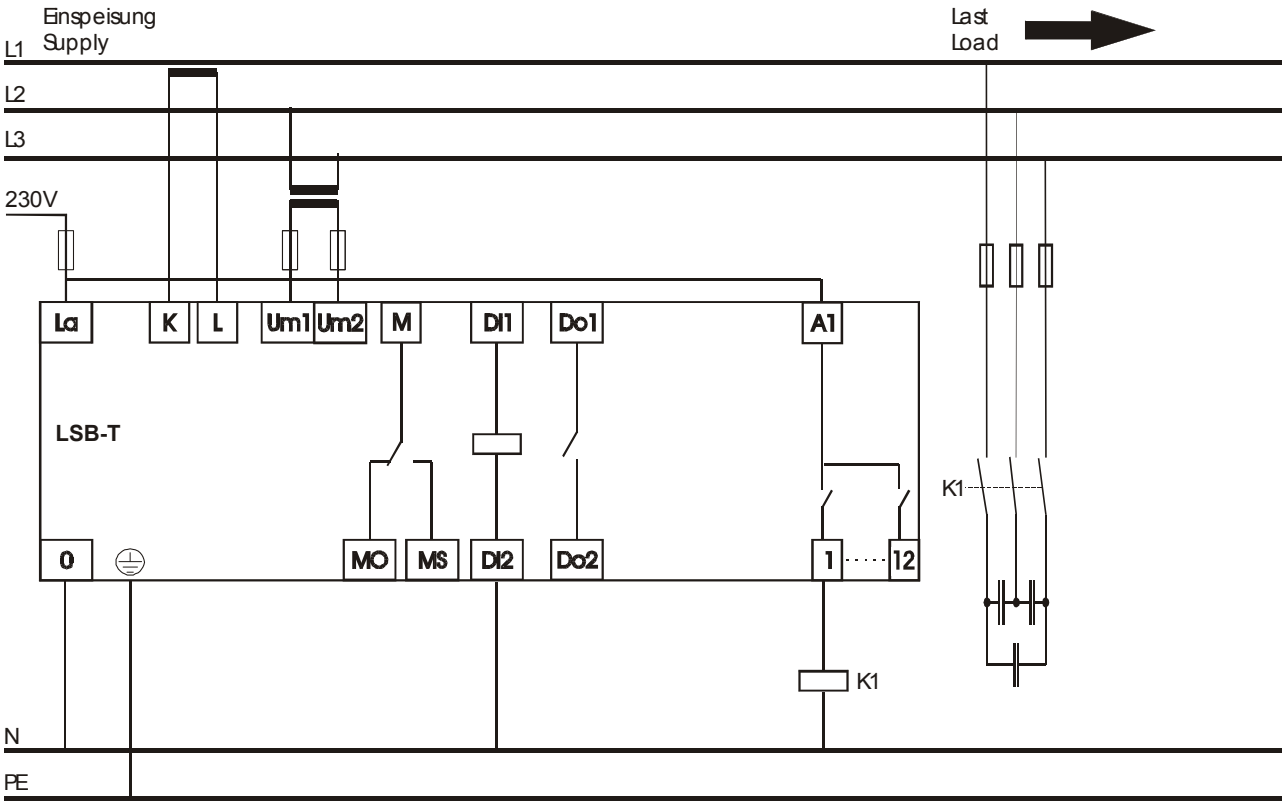

3.8 LSB-T06/12R-3AHV (LSB-T*3phase*)

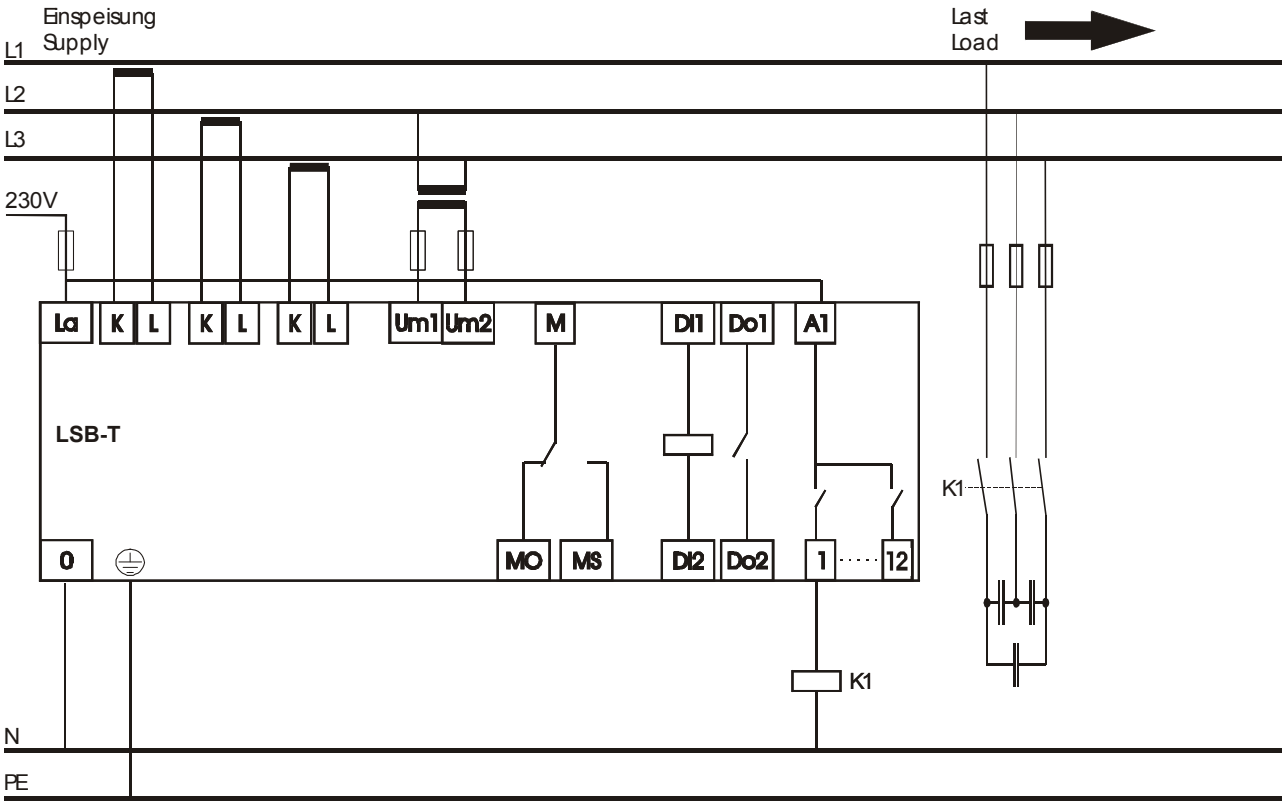

3.9 LSB-T I/O

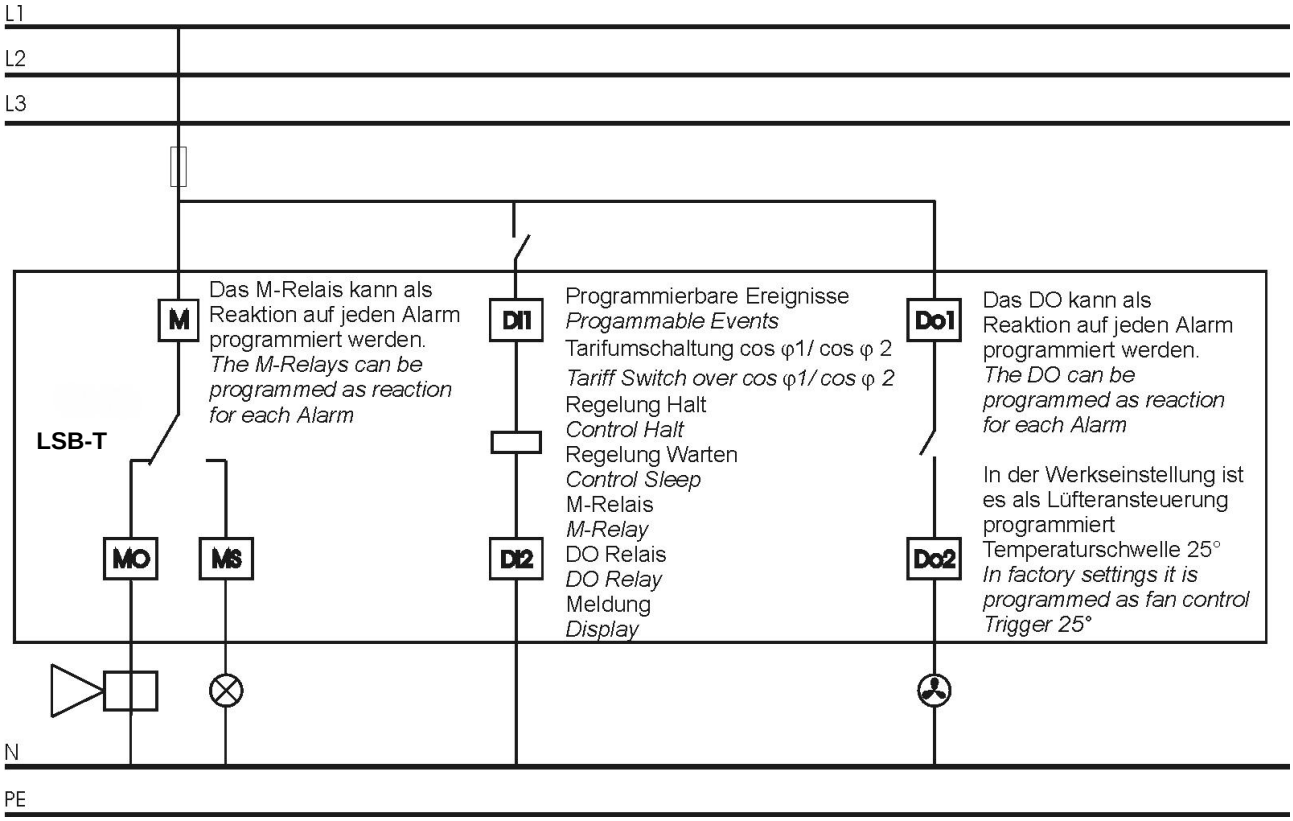

3.10 Synchronizing of datalogger

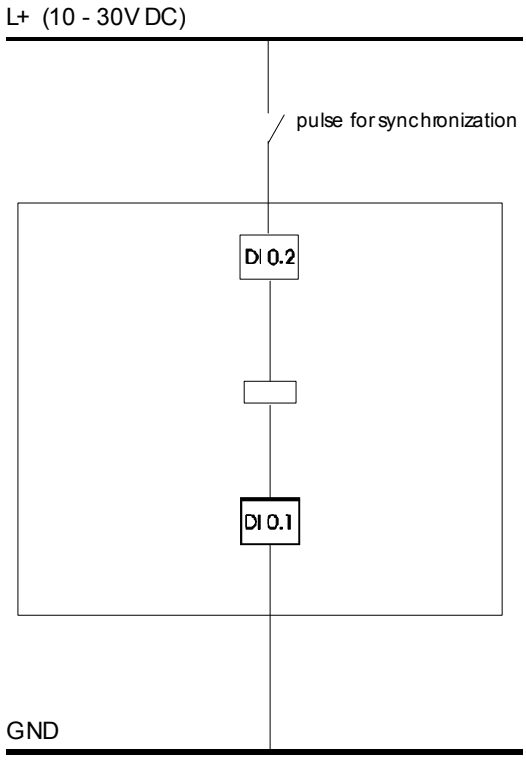

4 Standard Setting

Function	Factory setting	Range of setting	Customer setting
Language	English	English, German, French	
CT-factor	1	1,0 – 6500,0	
VT-factor	1	1,0 – 350,0	
Nominal voltage (ph-ph)	400V	100 – 220000V	
Connection measurement	L-N	L-N, L-L	
Synchronisation frequency	Auto	Auto, 50Hz or 60Hz	
Phase compensation	0°	0° … 345°, steps 15°	
V-tolerance min	10%	2 – 90%	
V-tolerance max	10%	2 – 30%	
Countdown Start AI	yes	yes / no	
Temperature offset	0 °C	-10 to + 10 °C	
CT type 1A	no	yes / no	
Discharge time	75s	0,1s – 1200,0s	
Step type	normal	normal, fix on, fix off, off,fast	
Control	on	on / freeze / off	
Cos phi 1	1.00	0,60 i – 1,00 – 0,70c	
Cos phi 2	i 0,95	0,60 I – 1,00 – 0,70c	
Switch interval	10s	1,0s – 1200,0s	
Switch interval step exchange	2s	1,0s – 1200,0s	
Asymmetry factor	1	-127 to +127	
Step recognition	on	on / off	
Switch cycle balancing	no	yes / no	
Switch cycle balancing %	10%	1% - 15%	
Step exchange	yes	yes / no	
Control sensitivity	60%	55% - 100%	
Control	Auto	Auto / LIFO / progressive/ combi filter	
Q Offset	0 kvar	-+ 3200 kvar	
I < limit freeze steps	no	yes / no	
Q cap. steps turn off	no	yes / no	
Fast meas delay	50 periods	0 –900 periods	
Fast max step value	0 kvar	0 – 9999,9 kvar	
Fast meas mean	0 periods	0 – 900 periods	
Control alarm	M, D	disabled, M, DO, D, CP, O, F	
No current alarm	M	disabled, M, DO, D, CP, O, F	
Step fault	M, D	disabled, M, DO, D, CP, O, F	
Step warning	M, D	disabled, M, DO, D, CP, O, F	
Limit step warning	50%	15 – 80%	
Limit switch cycles	100000	1 - 9999999	
Cos phi alarm	disabled	disabled, M, DO, D, CP, O, F	
Limit cos phi min	c 0.90	c 0.90 – limit max - 0,01	
Limit cos phi max	i 0.90	i 0.90 – limit min – 0.01	
ΔT (time delay)	300s	1s – 36000s	
Harmonic U alarm	M, D	disabled, M, DO, D, CP, O, F	
Limit harmonics U	20%	1% - 99,9%	
Harmonic I alarm	disabled	disabled, M, DO, D, CP, O, F	
Limit harmonics I	50%	1% - 99,9%	
Alarm overload P	no	disabled, M, DO, D, CP, O, F	
Limit overload P	1.00kW	1.0 ... 99999.9 kW	
Alarm overload Q	disabled	disabled, M, DO, D, CP, O, F	
Limit overload Q	1.00kvar	1.0 ... 99999.9 kvar	

Function	Factory setting	Range of setting	Customer setting
P-export alarm	disabled	disabled, M, DO, D, CP, O, F	
Temp1 alarm	DO	disabled, M, DO, D, CP, O, F	
Limit temperature 1	25°C	20°C – (temp2)	
ΔT (temp. hysteresis) Temp1	1.0°C	0.5°C – 9.9°C	
Temp2 alarm	M, D, O	disabled, M, DO, D, CP, O, F	
Limit temperature 2	70°C	temp2 – 70°C	
ΔT (temp. hysteresis) Temp2	1.0°C	0.5°C – 9.9°C	
DI Input alarm	disabled	disabled, M, DO, D, CP, O, F	
DI trigger	high	high / low	
Frequency alarm	disabled	disabled, M, DO, D, CP, O, F	
Limit low frequency	45.0Hz	45.0Hz – (limit high -0,1Hz)	
Limit high frequency	65.0Hz	(limit low +0,1Hz) – 65.0Hz	
Modbus baudrate	9600	1200 – 38400	
Modbus parity	8E1	8E1, 8°1, 8N2	
Modbus address	1	1 – 247	
Storage interval (datalogger)	0 min	0 – 720 min	
Synchronisation DI input	off	on / off	
Setup DI input	High	High / low	

5 Trouble shooting

Problem	Possible cause	Remedy
no display	auxiliary voltage missing	check correct connection of auxiliary voltage, if necessary rectify
display "U<>LIMIT"	measurement voltage out of range wrong settings for voltage measurement	check correct connection of measurement voltage, if necessary rectify check settings in menu "SETUP / MEASUREMENT", if necessary rectify
display "I<LIMIT"	measurement current too small	check connection of CT, probably there is a break in the line CT ratio too high, if necessary replace CT remove short circuit link of the CT
wrong display of current or voltage	wrong transformer ratio setting of Q offset	check settings PT- or CT-ratio in menu "SETUP / MEASUREMENT", if necessary rectify correct setting of Q offset
wrong power factor is displayed	wrong settings at the regulator setting of Q offset	check settings "NOMINAL VOLTAGE" and "CONNECTION" in menu "SETUP" and setting "PHASE COMPENSATION" in menu "EXTENDED", if necessary rectify correct setting of Q offset
power factor doesn't change after switching on a step, step is switched off again	CT mounted in wrong position	check mounting position referring circuit diagram (current of load and capacitors have to be measured!), if necessary rectify
alarm "overcurrent"	current higher than allowed	check CT ratio, probably replace by suitable transformer type
alarm "control"	permanent overcompensation permanent undercompensation	check settings check contactors, probably contact stick together check settings check capacitors, possibly fuse defective check dimensioning of the compensation unit
reversed control mode	current or voltage clamps interchanged	correct connection or adapt phase compensation
single steps are not switched on or off	wrong settings	check, if referring steps are defined as fix steps (permanently on or off)
steps are detected as defective	step defective	check capacitor steps, probably fuse, capacitor or contactor defective
steps are not switched on	step size too large	necessary reactive power smaller than switching threshold of step size of the smallest step
regulator still doesn't work proper		contact VMtec

6 Technical Data

Auxiliary voltage	100 - 132V / 207 - 253V, 45-65Hz, max. fuse 6A
Voltage measuring	50 – 530V, 45 – 65Hz, PT-ratio 1 - 350
Current measuring	0 – 5A, sensitivity 15mA, burden 15mΩ (option -3A: 3x 0 – 5A) overload 20% continuous, CT-ratio 1 - 6500
Control exits	6R, 12R, 6T, 12T, 12RT relays: N/O, one common point, max. fuse 6A breaking capacity: 250V AC / 5A, 400V AC / 2A, 110V DC / 0,4A, 30V DC / 5A static outputs: open-collector, breaking capacity: 8 – 48V DC / 100mA
Alarm contact	C/O, voltfree, programmable max. fuse 6A, breaking capacity 250V AC / 5A
Digital input DI0.1-DI0.2 (optional)	10 – 30V DC, for synchronization of data-logger
Digital input DI1.1-DI1.2	50 – 250V AC, programmable
Digital output	N/O, voltfree, programmable max. fuse 6A, breaking capacity 250V AC / 5A
Data-logger (optional)	2MB
Interface (optional)	RS485 Modbus RTU protocol (Slave)
Ambient temperature	operation: 0°C ... +70°C, storage: -20°C ... +85°C
Humidity	0% - 95%, without moisture condensation
Overvoltage class	II, pollution degree 3 (DIN VDE 0110, Teil 1 / IEC 60664-1)
Standards	DIN VDE 0110 Teil 1 (IEC 60664-1:1992) VDE 0411 Teil 1 (DIN EN 61010-1 / IEC 61010-1:2001) VDE 0843 Teil 20 (DIN EN 61326 / IEC 61326:1997 + A1:1998 + A2:2000)
Conformity and listing	CE, UL, cUL, GOST-R
Terminals	screw-type, plugable, max. 2,5mm^2
Casing	front: instrument casing plastic (UL94-VO), rear: metal
Protection class	front: IP 54, rear: IP 20
Weight	ca. 0,8 kg
Dimensions	144 x 144 x 58mm (h x w x d), cutout 138$^{+0,5}$ x 138$^{+0,5}$ mm

VMtec GmbH, 65189 Wiesbaden, Park str 23, Germany
Phone: +49 0611 9005701, Fax: +49 0611 9005702,
nfo@vmtec.de
http://www.vmtec.de